UNIVERSITY OF CAMBRIDGE INTERNATIONAL EXAMINATIONS
General Certificate of Education Advanced Level

CANDIDATE NAME

CENTRE NUMBER

CANDIDATE NUMBER

*0021239307*

**PHYSICS** **9702/42**

Paper 4 A2 Structured Questions **May/June 2012**

**2 hours**

Candidates answer on the Question Paper.

No Additional Materials are required.

**READ THESE INSTRUCTIONS FIRST**

Write your Centre number, candidate number and name on all the work you hand in.
Write in dark blue or black pen.
You may use a soft pencil for any diagrams, graphs or rough working.
Do not use staples, paper clips, highlighters, glue or correction fluid.
DO **NOT** WRITE IN ANY BARCODES.

Answer **all** questions.
You may lose marks if you do not show your working or if you do not use appropriate units.

At the end of the examination, fasten all your work securely together.
The number of marks is given in brackets [ ] at the end of each question or part question.

| For Examiner's Use | |
|---|---|
| 1 | |
| 2 | |
| 3 | |
| 4 | |
| 5 | |
| 6 | |
| 7 | |
| 8 | |
| 9 | |
| 10 | |
| 11 | |
| 12 | |
| Total | |

This document consists of **23** printed pages and **1** blank page.


© UCLES 2012

**Data**

| | |
|---|---|
| speed of light in free space, | $c = 3.00 \times 10^{8}\ \text{m s}^{-1}$ |
| permeability of free space, | $\mu_0 = 4\pi \times 10^{-7}\ \text{H m}^{-1}$ |
| permittivity of free space, | $\varepsilon_0 = 8.85 \times 10^{-12}\ \text{F m}^{-1}$ |
| elementary charge, | $e = 1.60 \times 10^{-19}\ \text{C}$ |
| the Planck constant, | $h = 6.63 \times 10^{-34}\ \text{J s}$ |
| unified atomic mass constant, | $u = 1.66 \times 10^{-27}\ \text{kg}$ |
| rest mass of electron, | $m_e = 9.11 \times 10^{-31}\ \text{kg}$ |
| rest mass of proton, | $m_p = 1.67 \times 10^{-27}\ \text{kg}$ |
| molar gas constant, | $R = 8.31\ \text{J K}^{-1}\ \text{mol}^{-1}$ |
| the Avogadro constant, | $N_A = 6.02 \times 10^{23}\ \text{mol}^{-1}$ |
| the Boltzmann constant, | $k = 1.38 \times 10^{-23}\ \text{J K}^{-1}$ |
| gravitational constant, | $G = 6.67 \times 10^{-11}\ \text{N m}^2\ \text{kg}^{-2}$ |
| acceleration of free fall, | $g = 9.81\ \text{m s}^{-2}$ |

© UCLES 2012

**Formulae**

uniformly accelerated motion, $s = ut + \frac{1}{2}at^2$
$v^2 = u^2 + 2as$

work done on/by a gas, $W = p\Delta V$

gravitational potential, $\phi = -\frac{Gm}{r}$

hydrostatic pressure, $p = \rho gh$

pressure of an ideal gas, $p = \frac{1}{3}\frac{Nm}{V}\langle c^2 \rangle$

simple harmonic motion, $a = -\omega^2 x$

velocity of particle in s.h.m., $v = v_0 \cos \omega t$
$v = \pm \omega \sqrt{(x_0^2 - x^2)}$

electric potential, $V = \frac{Q}{4\pi\varepsilon_0 r}$

capacitors in series, $1/C = 1/C_1 + 1/C_2 + \ldots$

capacitors in parallel, $C = C_1 + C_2 + \ldots$

energy of charged capacitor, $W = \frac{1}{2}QV$

resistors in series, $R = R_1 + R_2 + \ldots$

resistors in parallel, $1/R = 1/R_1 + 1/R_2 + \ldots$

alternating current/voltage, $x = x_0 \sin \omega t$

radioactive decay, $x = x_0 \exp(-\lambda t)$

decay constant, $\lambda = \frac{0.693}{t_{\frac{1}{2}}}$

© UCLES 2012

**[Turn over**

## Section A

Answer **all** the questions in the spaces provided.

**1** **(a)** State Newton's law of gravitation.

.....

.....

.....[2]

**(b)** The Earth and the Moon may be considered to be isolated in space with their masses concentrated at their centres.
The orbit of the Moon around the Earth is circular with a radius of $3.84 \times 10^5$ km. The period of the orbit is 27.3 days.

Show that

**(i)** the angular speed of the Moon in its orbit around the Earth is $2.66 \times 10^{-6}$ rad s$^{-1}$,

[1]

**(ii)** the mass of the Earth is $6.0 \times 10^{24}$ kg.

[2]

**(c)** The mass of the Moon is $7.4 \times 10^{22}$ kg.

**(i)** Using data from **(b)**, determine the gravitational force between the Earth and the Moon.

force = ..... N [2]

**(ii)** Tidal action on the Earth's surface causes the radius of the orbit of the Moon to increase by 4.0 cm each year.

Use your answer in **(i)** to determine the change, in one year, of the gravitational potential energy of the Moon. Explain your working.

energy change = ..... J [3]

**2** A ball of mass 37 g is held between two fixed points A and B by two stretched helical springs, as shown in Fig. 2.1.

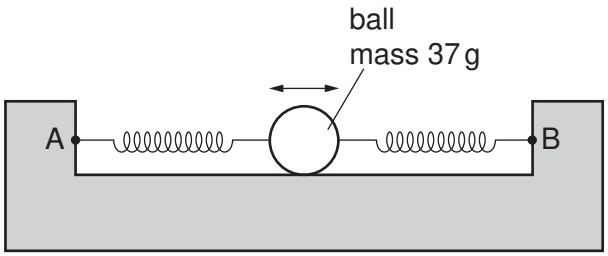


**Fig. 2.1**

The ball oscillates along the line AB with simple harmonic motion of frequency 3.5 Hz and amplitude 2.8 cm.

**(a)** Show that the total energy of the oscillations is 7.0 mJ.

[2]

**(b)** At two points in the oscillation of the ball, its kinetic energy is equal to the potential energy stored in the springs.
Calculate the magnitude of the displacement at which this occurs.

displacement = ..... cm [3]

© UCLES 2012

**(c)** On the axes of Fig. 2.2 and using your answers in **(a)** and **(b)**, sketch a graph to show the variation with displacement $x$ of

**(i)** the total energy of the system (label this line T), [1]

**(ii)** the kinetic energy of the ball (label this line K), [2]

**(iii)** the potential energy stored in the springs (label this line P). [2]

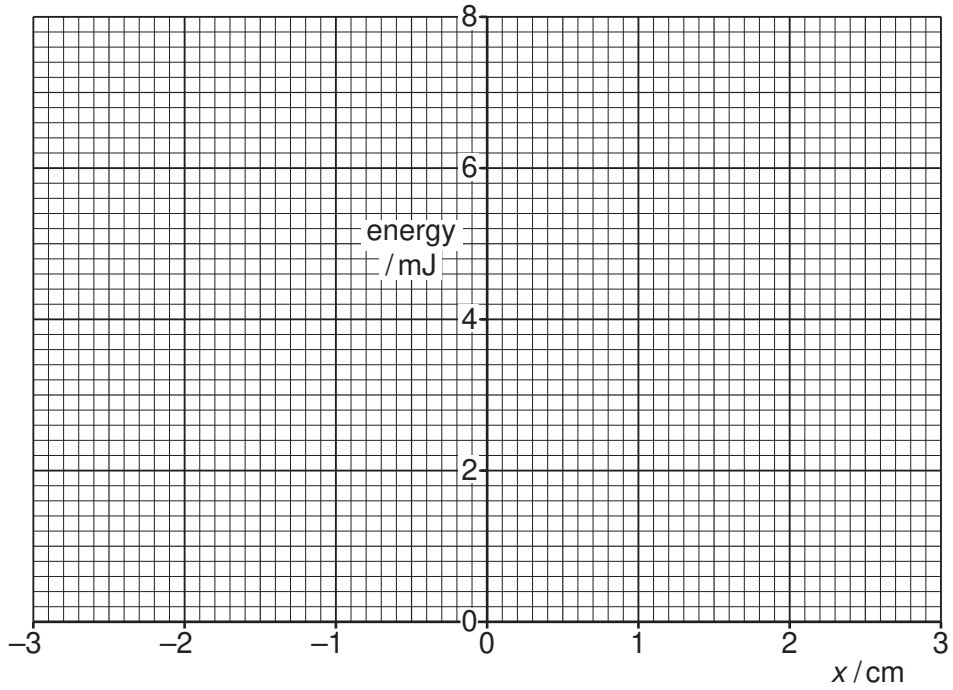


**Fig. 2.2**

**(d)** The arrangement in Fig. 2.1 is now rotated through 90° so that the line AB is vertical and the ball oscillates in a vertical plane.

Suggest one form of energy, other than those in **(c)**, that must be taken into consideration when plotting new graphs to show energy changes with displacement.

.....[1]

© UCLES 2012

**BLANK PAGE**

© UCLES 2012

**3** **(a)** State what is meant by the *internal energy* of a system.

.....

.....

.....[2]

**(b)** State and explain qualitatively the change, if any, in the internal energy of the following systems:

**(i)** a lump of ice at 0 °C melts to form liquid water at 0 °C,

.....

.....

.....

.....[3]

**(ii)** a cylinder containing gas at constant volume is in sunlight so that its temperature rises from 25 °C to 35 °C.

.....

.....

.....

.....[3]

© UCLES 2012

**4** A charged point mass is situated in a vacuum. A proton travels directly towards the mass, as illustrated in Fig. 4.1.

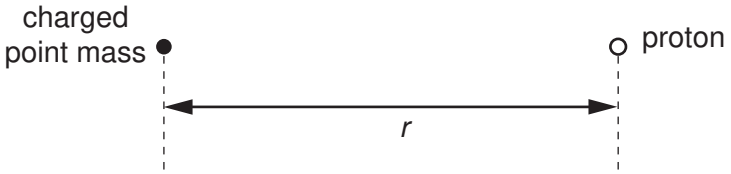


**Fig. 4.1**

When the separation of the mass and the proton is $r$, the electric potential energy of the system is $U_P$.

The variation with $r$ of the potential energy $U_P$ is shown in Fig. 4.2.

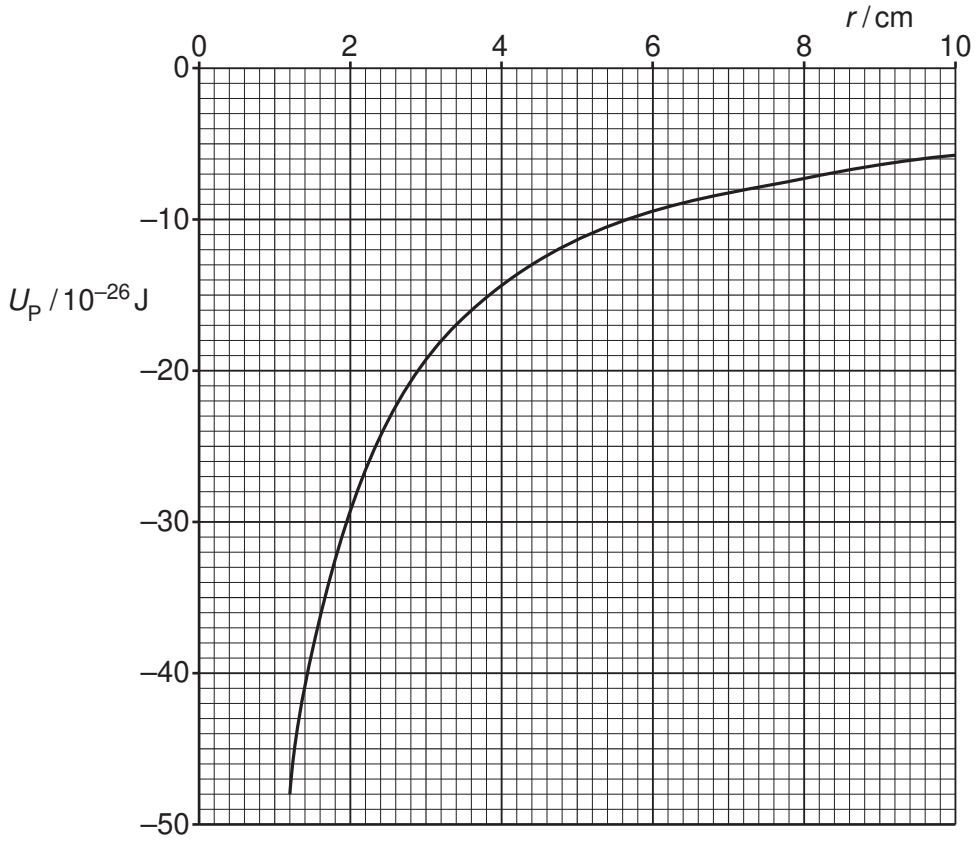


**Fig. 4.2**

**(a) (i)** Use Fig. 4.2 to state and explain whether the mass is charged positively or negatively.

.....

.....

..... [2]

**(ii)** The gradient at a point on the graph of Fig. 4.2 is $G$.
Show that the electric field strength $E$ at this point due to the charged point mass is given by the expression

$$Eq = G$$

where $q$ is the charge at this point.

.....

.....

..... [2]

**(b)** Use the expression in **(a)(ii)** and Fig. 4.2 to determine the electric field strength at a distance of 4.0 cm from the charged point mass.

field strength = ..... $V\,m^{-1}$ [4]

**5** **(a)** Define the *tesla*.

.....

.....

.....

.....[3]

**(b)** A horseshoe magnet is placed on a balance. A stiff metal wire is clamped horizontally between the poles, as illustrated in Fig. 5.1.

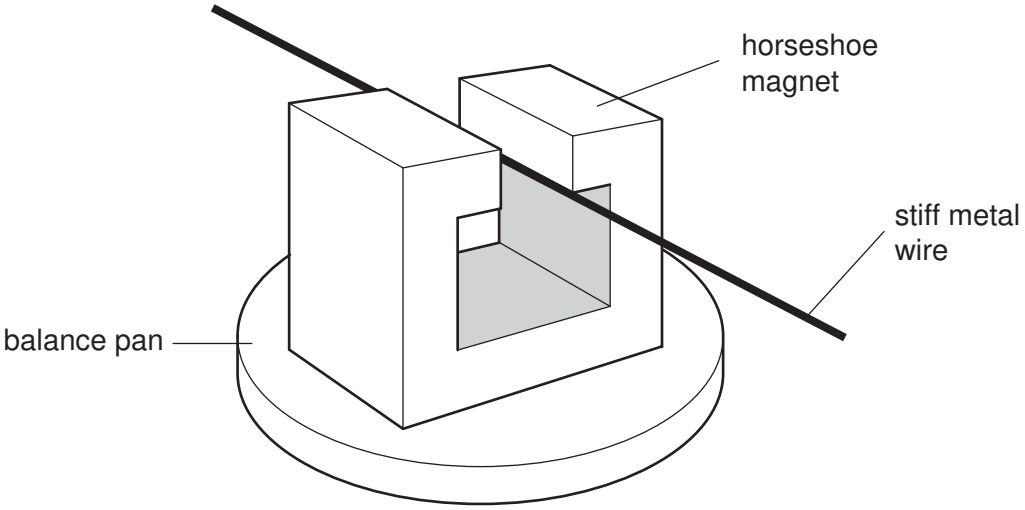


**Fig. 5.1**

The magnetic flux density in the space between the poles of the magnet is uniform and is zero outside this region.
The length of the metal wire normal to the magnetic field is 6.4 cm.

When a current in the wire is switched on, the reading on the balance increases by 2.4 g.
The current in the wire is 5.6 A.

**(i)** State and explain the direction of the force on the wire due to the current.

.....

.....

.....

.....[3]

© UCLES 2012

**(ii)** Calculate the magnitude of the magnetic flux density between the poles of the magnet.

flux density = .....T [2]

**(c)** A low frequency alternating current is now passed through the wire in **(b)**.
The root-mean-square (r.m.s.) value of the current is 5.6 A.

Describe quantitatively the variation of the reading seen on the balance.

.....

.....

.....

.....[2]

**6** **(a)** Describe the main principles of the determination of the charge on an oil drop by Millikan's experiment. You may draw a diagram if you wish.

.....

.....

.....

.....

.....

.....

.....

.....

.....

.....

.....[7]

**(b)** In an experiment to determine the fundamental charge, values of charge on oil drops were found by a student to be as shown below.

$3.2 \times 10^{-19}$ C; $6.4 \times 10^{-19}$ C; $16 \times 10^{-19}$ C; $9.7 \times 10^{-19}$ C;

$12.8 \times 10^{-19}$ C; $3.1 \times 10^{-19}$ C; $6.3 \times 10^{-19}$ C.

State the value, to two significant figures, of the fundamental charge that is suggested by these values of charge on oil drops.

fundamental charge = ..... C [1]

© UCLES 2012

**7** The photoelectric effect may be represented by the equation

photon energy = work function energy + maximum kinetic energy of electron.

**(a)** State what is meant by *work function energy*.

.....

.....[1]

**(b)** The variation with frequency $f$ of the maximum kinetic energy $E_K$ of photoelectrons emitted from the surface of sodium metal is shown in Fig. 7.1.

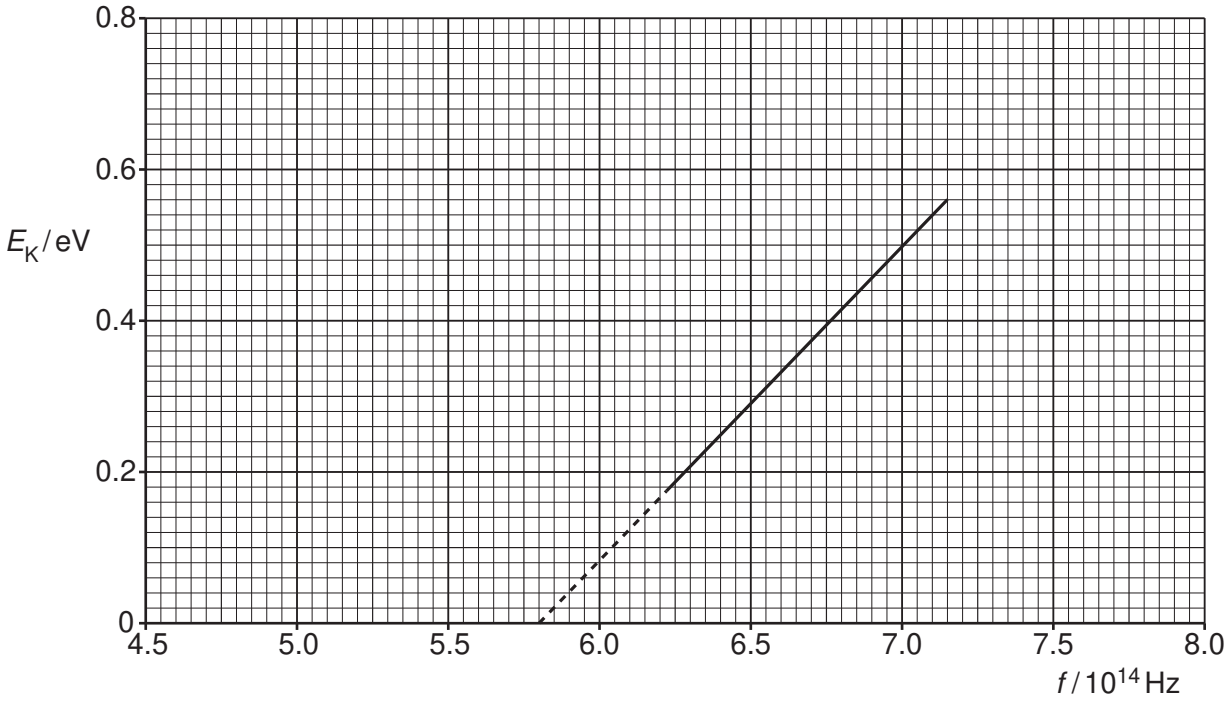


**Fig. 7.1**

Use the gradient of the graph of Fig. 7.1 to determine a value for the Planck constant $h$. Show your working.

$h$ = .....J s [2]

**(c)** The sodium metal in **(b)** has a work function energy of 2.4 eV. The sodium is replaced by calcium which has a work function energy of 2.9 eV.

On Fig. 7.1, draw a line to show the variation with frequency $f$ of the maximum kinetic energy $E_K$ of photoelectrons emitted from the surface of calcium. [3]

**8** The element strontium has at least 16 isotopes. One of these isotopes is strontium-89. This isotope has a half-life of 52 days.

**(a)** State what is meant by *isotopes*.

.....

.....

..... [2]

**(b)** Calculate the probability per second of decay of a nucleus of strontium-89.

probability = ..... $s^{-1}$ [3]

**(c)** A laboratory prepares a strontium-89 source.
The activity of this source is measured 21 days after preparation of the source and is found to be $7.4 \times 10^6$ Bq.

Determine, for the strontium-89 source at the time that it was prepared,

**(i)** the activity,

activity = ..... Bq [2]

**(ii)** the mass of strontium-89.

mass = ..... g [2]

© UCLES 2012

## Section B

Answer **all** the questions in the spaces provided.

**9** An operational amplifier (op-amp) may be used as part of the processing unit in an electronic sensor.

**(a)** State four properties of an ideal operational amplifier.

1. .....

2. .....

3. .....

4. .....

[4]

**(b)** A comparator circuit incorporating an ideal op-amp is shown in Fig. 9.1.

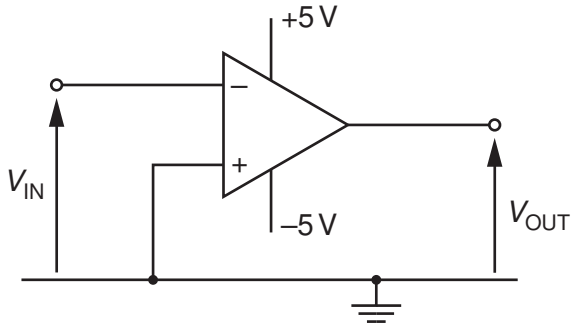


**Fig. 9.1**

The variation with time $t$ of the input potential $V_{IN}$ is shown in Fig. 9.2.

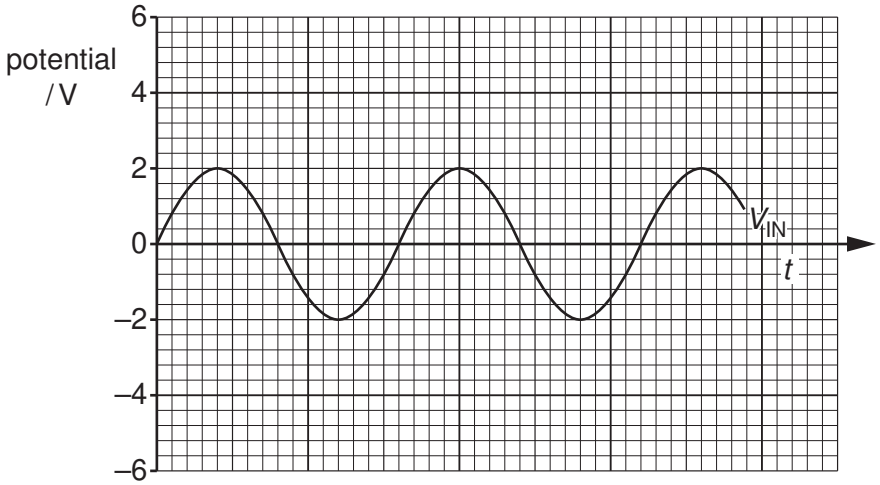


**Fig. 9.2**

On the axes of Fig. 9.2, draw a graph to show the variation with time $t$ of the output potential $V_{OUT}$. [3]

**(c)** The output potential $V_{OUT}$ is to be displayed using two light-emitting diodes (LEDs). A diode emitting red light is to indicate when $V_{OUT}$ is positive and a diode emitting green light is to be used to indicate when $V_{OUT}$ is negative.

Complete Fig. 9.3 to show the connections of the two LEDs to the output of the op-amp. Label each LED with the colour of light that it emits.

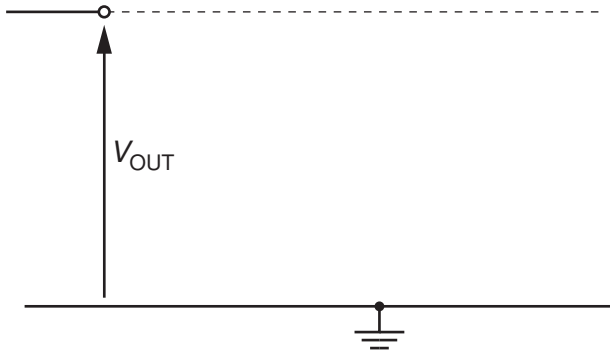


**Fig. 9.3**

[3]

**10 (a)** An aluminium block is placed near to a small source of X-ray radiation, as shown in Fig. 10.1.

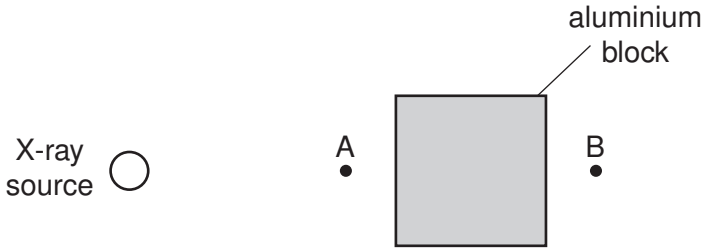


**Fig. 10.1**

X-rays from the source are detected at point A and at point B.

State two reasons why the intensity of the X-ray beam at point B is not as great as the intensity at point A.

1. .....

.....

2. .....

.....

[2]

**(b)** A cross-section through a model of a finger is shown in Fig. 10.2.

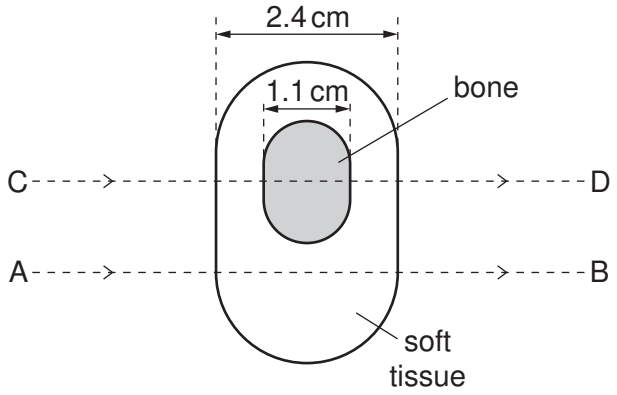


**Fig. 10.2**

The thickness of the model is 2.4 cm and that of the bone in the model is 1.1 cm.
Parallel beams of X-rays are incident on the model in the directions AB and CD, as shown in Fig. 10.2.

© UCLES 2012

Data for the linear attenuation (absorption) coefficient $\mu$ for the bone and the soft tissue in the model are given in Fig. 10.3.

| | $\mu$ / cm$^{-1}$ |
|---|---|
| bone | 3.0 |
| soft tissue | 0.27 |

**Fig. 10.3**

Calculate the ratio

$$\frac{\text{intensity of X-ray beam incident on the model}}{\text{intensity of X-ray beam emergent from the model}}$$

for

**(i)** the beam AB,

ratio = .....[2]

**(ii)** the beam CD.

ratio = .....[2]

**(c)** Use your answers in **(b)** to suggest why, for this model, an X-ray image with good contrast may be obtained.

.....

.....[1]

**11** A signal that is transmitted over a long distance will be attenuated and it will pick up noise.

**(a)** State what is meant by

**(i)** *attenuation*,

.....

.....[1]

**(ii)** *noise*.

.....

.....

.....[2]

**(b)** Explain why regenerator amplifiers do not amplify the noise that has been picked up on digital signals.

.....

.....

.....[2]

**(c)** A transmitter on Earth produces a signal of power 2.4 kW. This signal, when received by a satellite, is attenuated by 195 dB.

Calculate the signal power received by the satellite.

power = ..... W [3]

**12** An incomplete simplified block diagram of the circuitry for a mobile-phone handset is shown in Fig. 12.1.

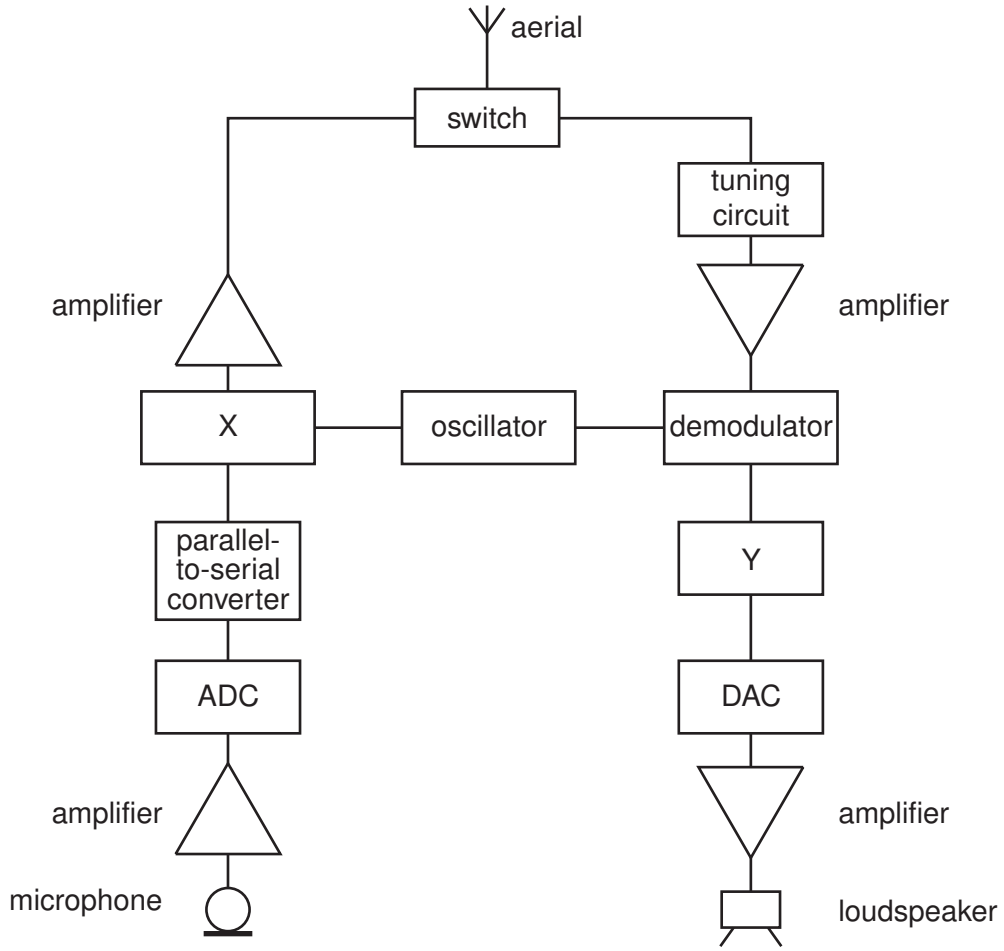


**Fig. 12.1**

**(a)** State the name of the block labelled

**(i)** X,

.....[1]

**(ii)** Y.

.....[1]

**Question 12 continues on page 24.**

**(b)** Explain the purpose of

**(i)** the switch,

.....

.....[1]

**(ii)** the parallel-to-serial converter.

.....

.....

.....[2]

Permission to reproduce items where third-party owned material protected by copyright is included has been sought and cleared where possible. Every reasonable effort has been made by the publisher (UCLES) to trace copyright holders, but if any items requiring clearance have unwittingly been included, the publisher will be pleased to make amends at the earliest possible opportunity.

University of Cambridge International Examinations is part of the Cambridge Assessment Group. Cambridge Assessment is the brand name of University of Cambridge Local Examinations Syndicate (UCLES), which is itself a department of the University of Cambridge.